REVISIONS				
REV.	DESCRIPTION	DATE	BY	APPROVED
02	Addded .02 flat to edge of punch, and .006 radius	03-28-2023	B.frank	-
03	WAS BRUDER 3 02493-00-029	6/8/2023	B.F	

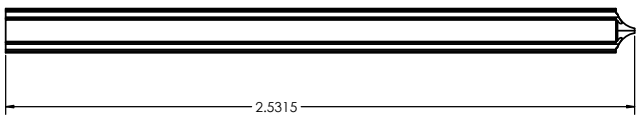

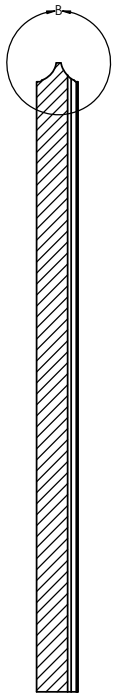

SECTION A-A

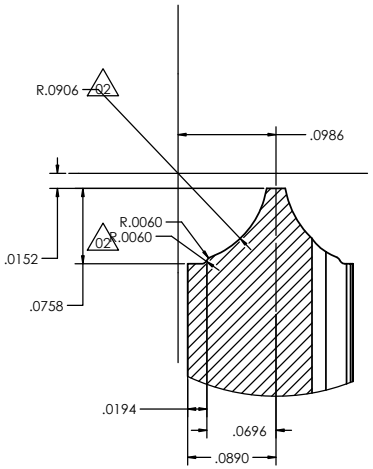

DETAIL B
SCALE 16 : 1

REFER TO 3D FOR ANY MISSING DIMENSIONS

NOTE:
A: ALL DIMENSION TOLERANCES APPLY AFTER PARTS FINISH
B: ALL THREADS TO BE PROTECTED FROM COATINGS

QTY: 7+0

PROPRIETARY AND CONFIDENTIAL

THE INFORMATION CONTAINED IN THIS DRAWING IS THE SOLE PROPERTY OF D&M HOLDING COMPANY. ANY REPRODUCTION IN PART OR AS A WHOLE WITHOUT THE WRITTEN PERMISSION OF D&M HOLDING COMPANY IS PROHIBITED.

ALL DRAWINGS AND PRINTS, WHETHER IN PRINTED OR ELECTRONIC FORMAT, MAY ONLY BE USED FOR THE PURPOSE FOR WHICH PERMISSION TO USE WAS GRANTED.

THIS DOCUMENT MAY CONTAIN TECHNOLOGY OR TECHNICAL DATA, THE USE OF WHICH IS RESTRICTED BY THE
U.S. ARMS EXPORT CONTROL ACT. THIS DATA IS SUBJECT TO THE LIMITATIONS SPECIFIED IN THE INTERNATIONAL
TRAFFIC IN ARMS REGULATIONS (ITAR). BY ACCEPTING THIS DATA, THE RECIPIENT AGREES TO HONOR THE REQUIREMENTS OF THE ITAR.

THE INFORMATION ON THIS DOCUMENT MAY NOT BE TRANSFERRED TO ANY OTHER COUNTRY, OR TO A NATIONAL OF ANY OTHER COUNTRY, OR OTHERWISE BE DISPOSED OF IN ANY OTHER COUNTRY, EITHER IN THEIR
ORIGINAL FORM OR AFTER BEING INCORPORATED INTO OTHER END-ITEMS IS PROHIBITED BY FEDERAL LAW.

THIRD ANGLE PROJECTION

◎ ±.002 F.I.M.
// ±.0005 PER INCH
⊥ ±.001 PER INCH

BREAK ALL SHARP EDGES AND DEBURR ALL HOLES .03 MAX

UNLESS OTHERWISE SPECIFIED:
DIMENSIONS ARE IN INCHES
TOLERANCES: FRACTIONAL ±1/64
ANGULAR: MACH ±.5 BEND ±1
ONE PLACE DECIMAL ±.25
TWO PLACE DECIMAL ±.01
THREE PLACE DECIMAL ±.005
FOUR PLACE DECIMAL ±.0005

MATERIAL
CARBIDE CD650 OR =

FINISH
√U.O.S.

DO NOT SCALE DRAWING

	NAME	DATE
DRAWN	B.F	
CHECKED		
ENG APPR.		
MFG APPR.		
Q.A.		

COMMENTS:

D&M Holding Company

TITLE:
BRUDERER LARGE PISTOL/RIFLE ANVIL PUNCH

SIZE	DWG. NO.	REV
D	PA0547	03

SCALE: 4:1 | WEIGHT: 0.0015 | SHEET 1 OF 1