REVISIONS			
REV.	DESCRIPTION	DATE	APPROVED
A	INITIAL RELEASE	9/8/20	JPF

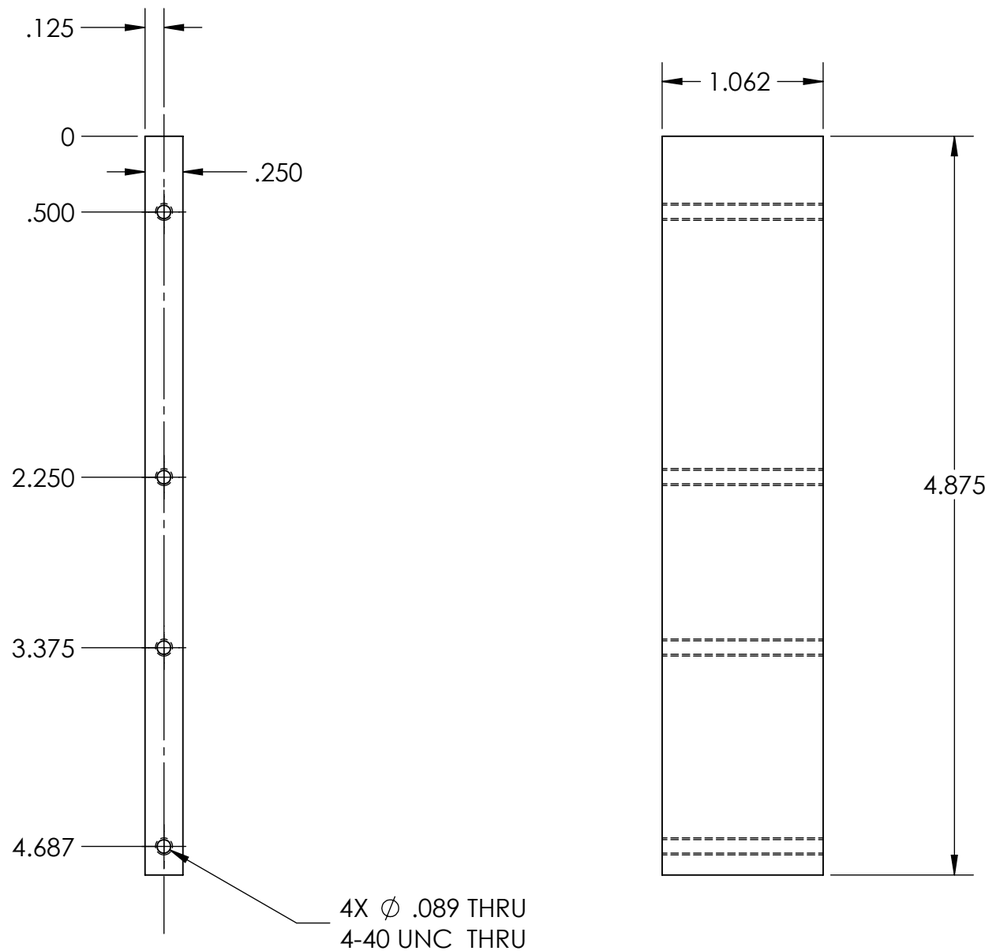

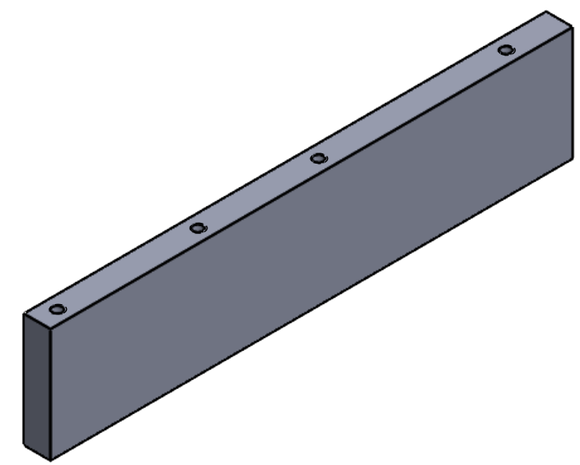

QTY REQ'D: 2

NOTES:

1. MATERIAL: AISI-1015/1020
2. HEAT TREAT: NONE
3. SURFACE FINISH 16 U.O.S.
4. MARK TOOL NO.: 437-060-002-001 REV A

THE INFORMATION CONTAINED IN THIS DRAWING IS THE SOLE PROPERTY OF D&M HOLDING COMPANY. ANY REPRODUCTION IN PART OR AS A WHOLE WITHOUT THE WRITTEN PERMISSION OF D&M HOLDING COMPANY IS PROHIBITED.

ALL DRAWINGS AND PRINTS, WHETHER IN PRINTED OR ELECTRONIC FORMAT, MAY ONLY BE USED FOR THE PURPOSE FOR WHICH PERMISSION TO USE WAS GRANTED.

THIS DOCUMENT MAY CONTAIN TECHNOLOGY OR TECHNICAL DATA, THE USE OF WHICH IS RESTRICTED BY THE U.S. ARMS EXPORT CONTROL ACT. THIS DATA IS SUBJECT TO THE LIMITATIONS SPECIFIED IN THE INTERNATIONAL TRAFFIC IN ARMS REGULATIONS (ITAR). BY ACCEPTING THIS DATA, THE RECIPIENT AGREES TO HONOR THE REQUIREMENTS OF THE ITAR.

THE INFORMATION ON THIS DOCUMENT MAY NOT BE TRANSFERRED TO ANY OTHER COUNTRY, OR TO A NATIONAL OF ANY OTHER COUNTRY, OR OTHERWISE BE DISPOSED OF IN ANY OTHER COUNTRY, EITHER IN THEIR ORIGINAL FORM OR AFTER BEING INCORPORATED INTO OTHER END-ITEMS IS PROHIBITED BY FEDERAL LAW.

UNLESS OTHERWISE SPECIFIED:

DIMENSIONS ARE IN INCHES
TOLERANCES:
FRACTIONAL ± 1/64
ANGULAR: MACH ±.5 BEND ±1
TWO PLACE DECIMAL ±.01
THREE PLACE DECIMAL ±.002
FOUR PLACE DECIMAL ±.0005

BREAK ALL SHARP CORNERS .01" UNLESS OTHERWISE NOTED

DO NOT SCALE DRAWING

	NAME	DATE
DRAWN	JPF	9/8/20
CHECKED		
ENG APPR.		
MFG APPR.		
Q.A.		

COMMENTS:

D&M Holding Company

TITLE:

CLIP BOX, SIDES

U.S. BAIRD 4L-37

SIZE	DWG. NO.	REV
B	437-06-002-001	A

SCALE: 1:1 WEIGHT: SHEET 1 OF 1