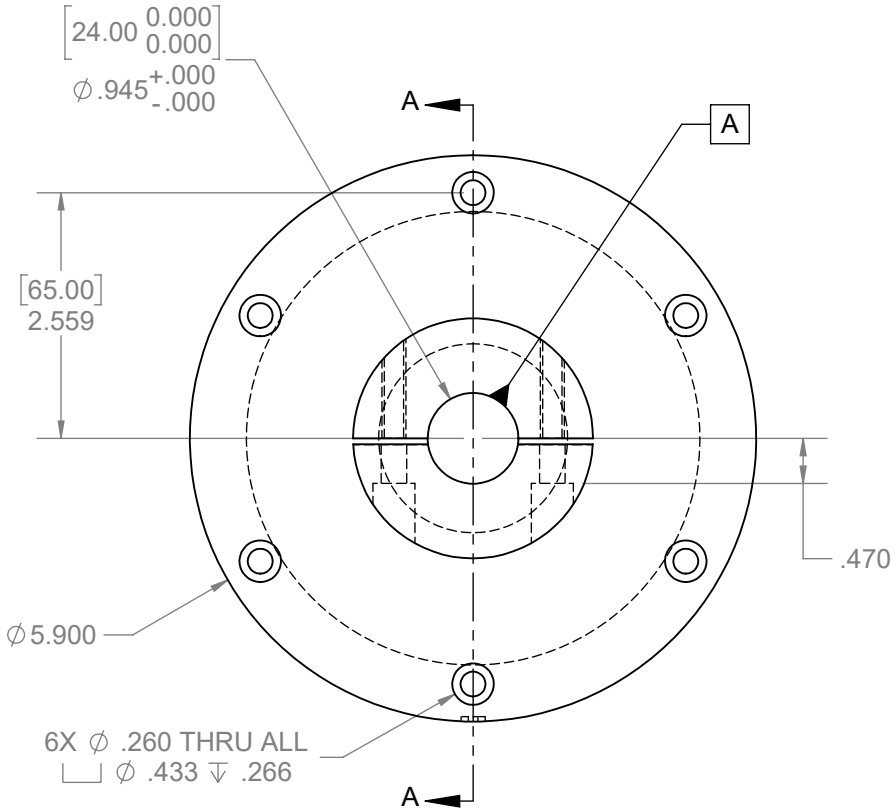

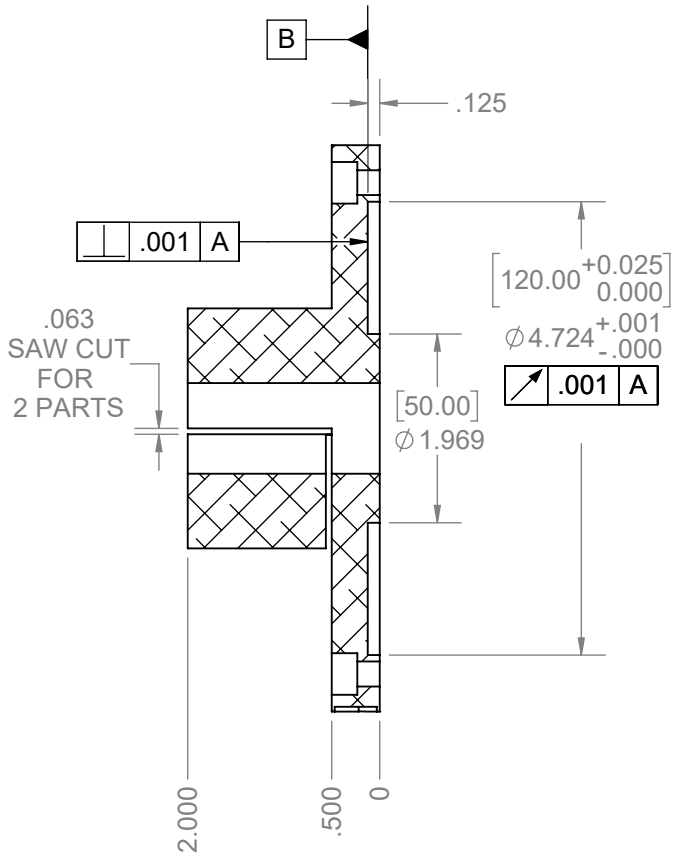

SECTION A-A

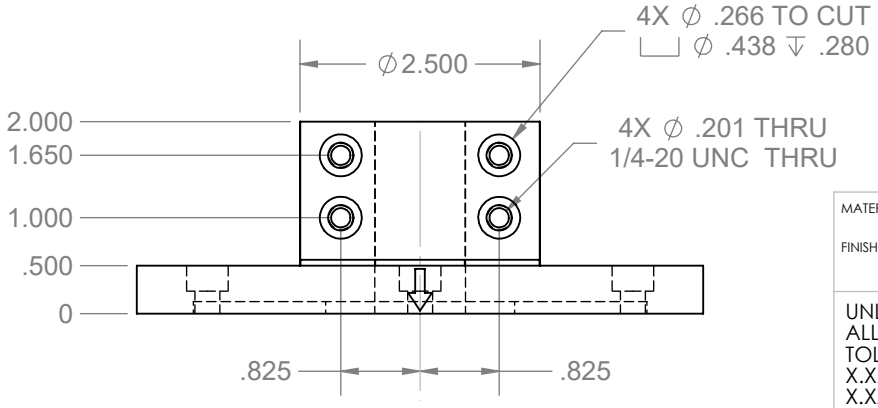

MATERIAL AL 6061 T6	DO NOT SCALE DRAWING	QTY REQD 1	
FINISH --	D&M Holding Company		
UNLESS OTHERWISE SPECIFIED ALL DIM. ARE INCHES TOLLERANCES ARE X.XX = ±0.015 X.XXX = ±0.005 X.XXXX = ±0.002 ANGLES = ±0.5° SURFACE FINISH = 125 MIC. IN BREAK AND DEBURR ALL EDGES	PIERCE STATION		
	SIZE A	DWG. NO. 0772 11 117	
DRAWN CHOLKE	CHECKED CHOLKE	DATE 8/4/2021	SCALE:1:2	SHEET 1 OF 1